# MonsterDish™

5 GHz 37 dBi Antenna

SICE DISTRIBUTORE UFFICIALE: www.sicetelecom.it

Model: MD-5G37

Quick Start Guide

## Introduction

Thank you for purchasing the Ubiquiti Networks® MonsterDish™ Antenna. This Quick Start Guide is designed to guide you through installation and also includes warranty terms.
For detailed information on package contents, please refer to the product packaging.

## Installation Requirements

- 13 mm, 17 mm, and 19 mm wrenches

  Note: Tighten all fasteners as follows:
  - Tighten M8 fasteners to 25 N·m.
  - Tighten M10 fasteners to 55 N·m.

- Phillips screwdriver
- Compatible radio* (sold separately):
  - 5 GHz Rocket® radio
  - 5 GHz airFiber® radio
    (requires *Universal Bracket*, included with radio)
- Clear line of sight between radios
- Vertical mounting orientation
- Mounting point:
  - At least 1 m below the highest point on the structure
  - For tower installations, at least 3 m below the top of the tower
- (Recommended) 2 Outdoor Gigabit PoE surge protectors

  Note: For guidelines about grounding and lightning protection, follow your local electrical regulatory codes.

- Outdoor, shielded Category 6 (or above) cabling and shielded RJ45 connectors are required for all wired Ethernet connections.

* *Check your local/regional regulations for the allowable antenna gain allowed for your application.*

SICE DISTRIBUTORE UFFICIALE: www.sicetelecom.it

# Hardware Installation

1. Assemble two Reflector Panels using two loosely tightened M8 bolts and fasteners (flat washers, lock washers, and nuts). Attach the inner bolt first, then the outer bolt.

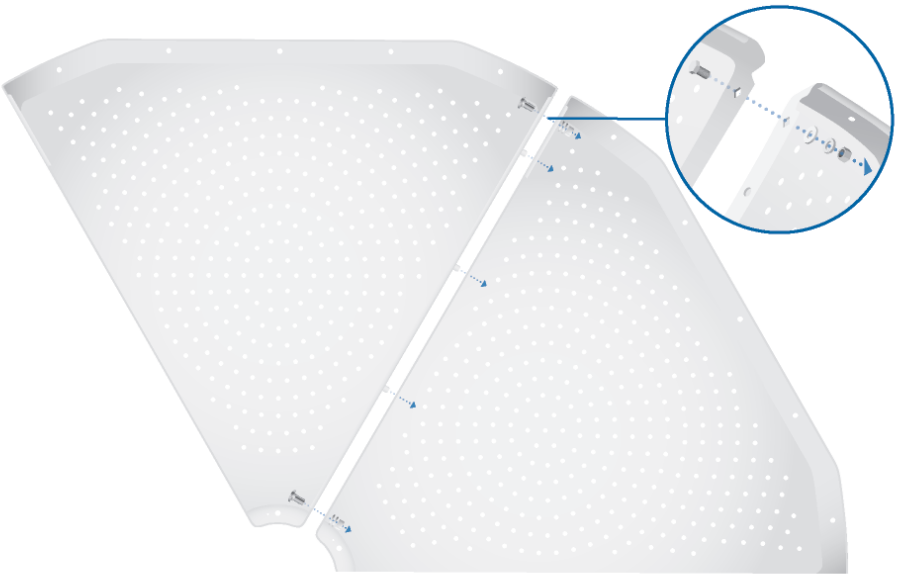

2. Attach three more Reflector Panels in the same manner, leaving all nuts loosely tightened.

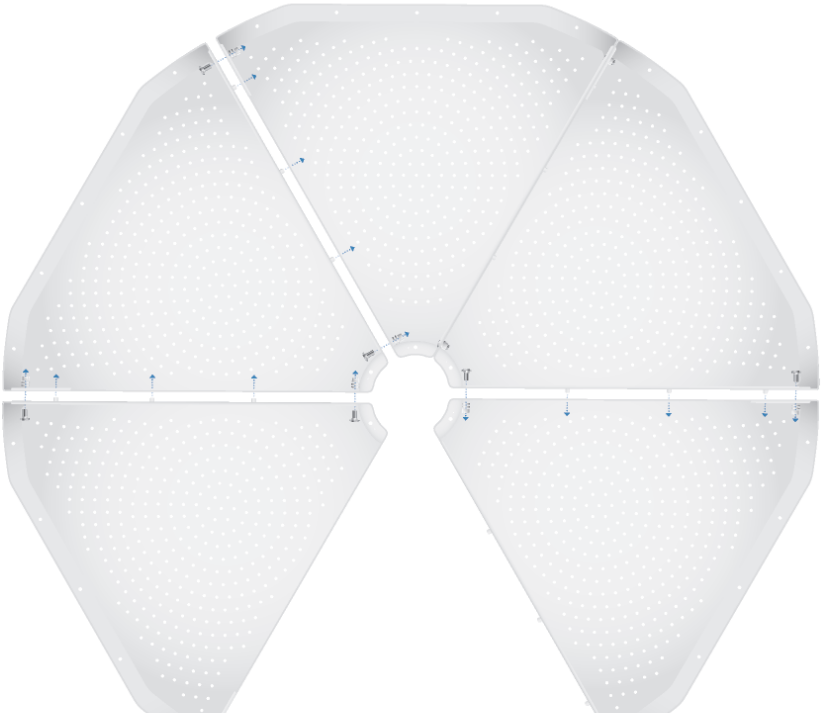

SICE DISTRIBUTORE UFFICIALE: www.sicetelecom.it

3. Attach the Radio Feed to the reflector assembly, ensuring that the small locating pin is positioned in the open space at bottom.

Note: The default polarity of the Radio Feed is V/H. To change to dual slant 45 polarity, perform the instructions in the section, *"Dual Slant 45 Polarity (Optional)"*, before proceeding with this step.

4. Attach the Feed Support Plate to the Radio Feed with the notch pointing to the open space, using two Feed Screws in the positions shown. Tighten the screws only until the five locating pins (indicated by arrows below) on the Radio Feed begin to engage the holes in the Reflector Panels.

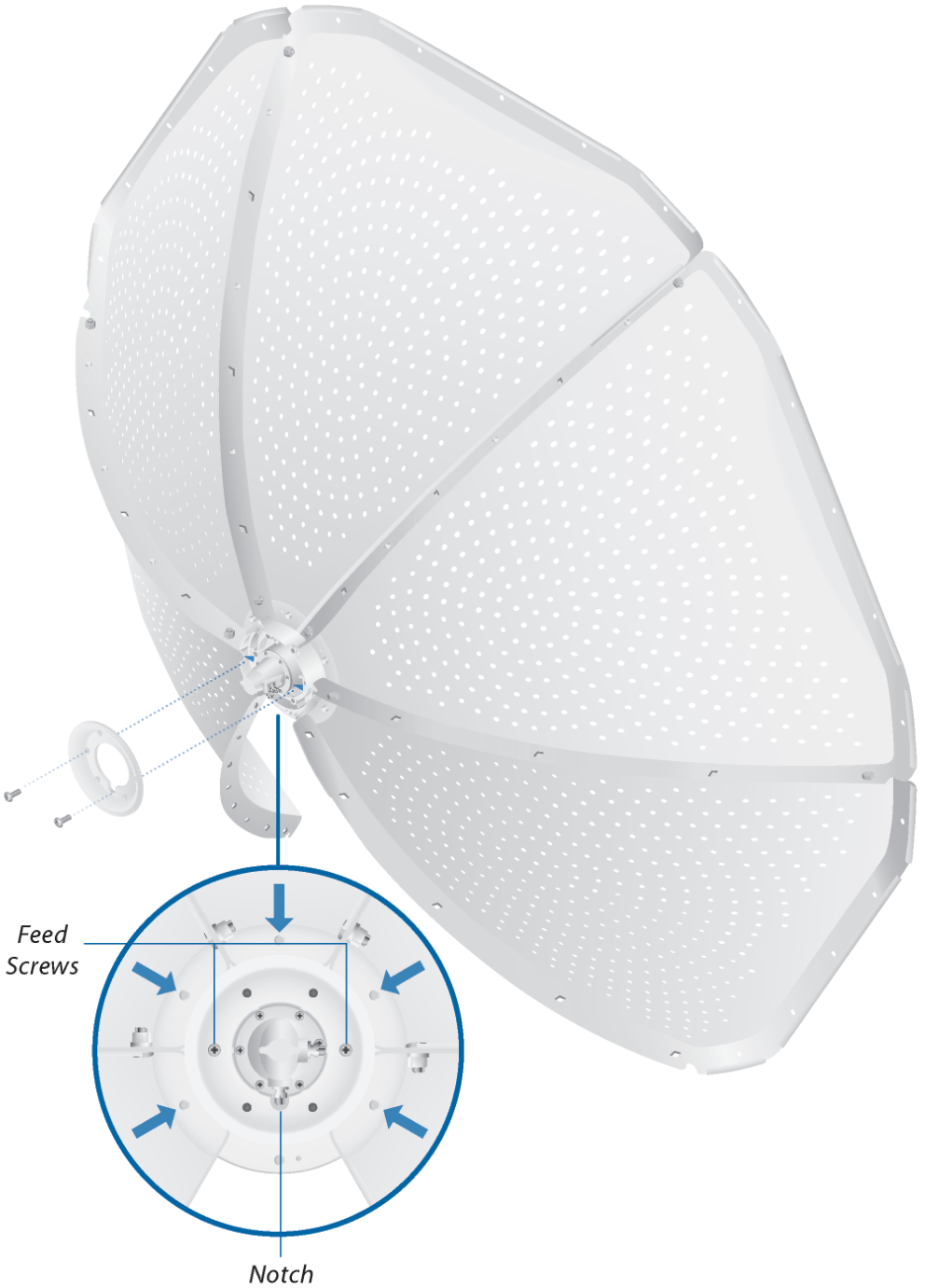

5. Guide the last Reflector Panel in place under the Feed Support Plate and attach the panel using four loosely tightened M8 bolts and fasteners (flat washers, lock washers, and nuts), two near the Feed Support Plate and two near the panel's outer edge. Ensure that all locating pins are engaged between adjacent panels and with the Feed Support Plate.

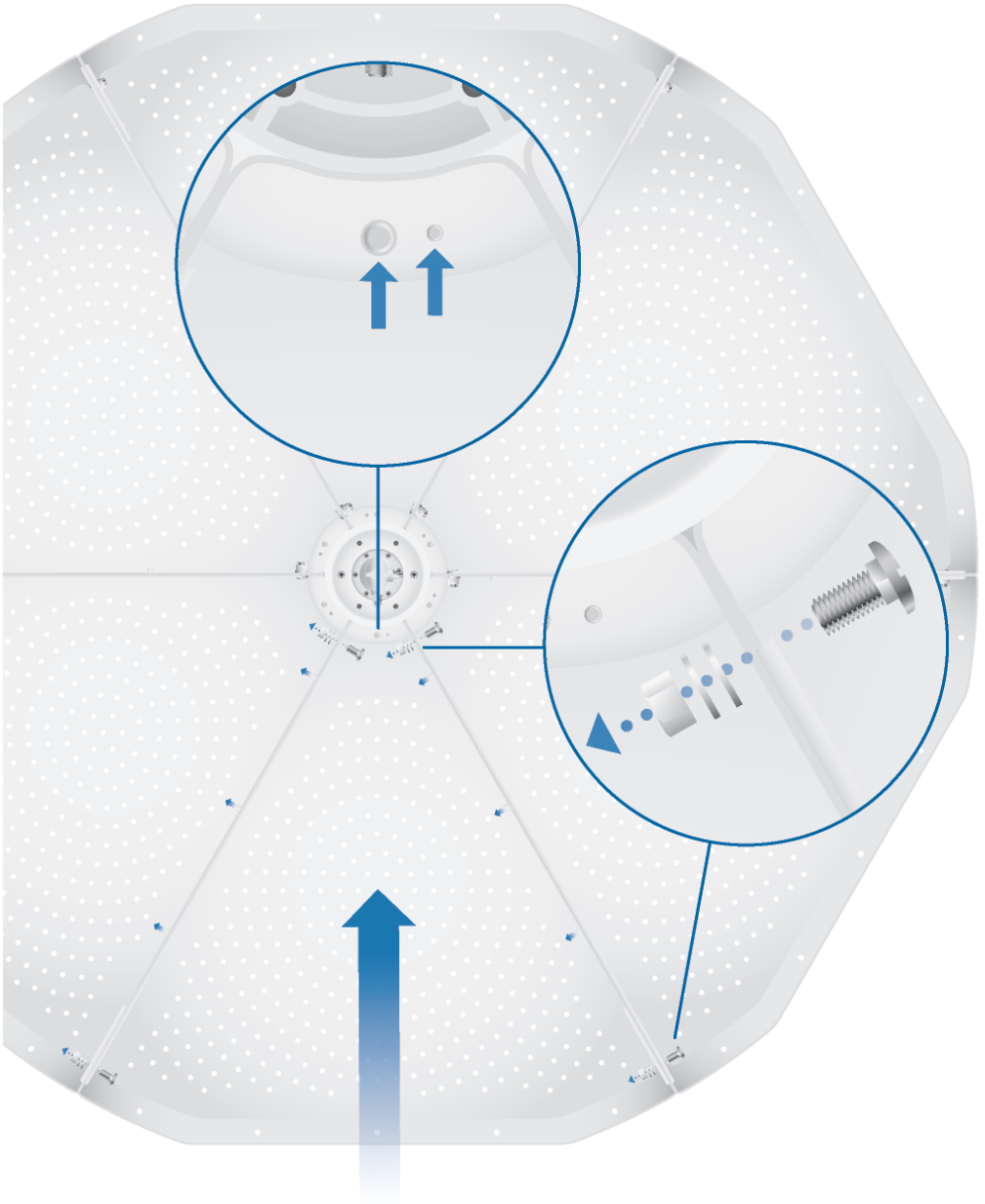

SICE DISTRIBUTORE UFFICIALE: www.sicetelecom.it

6. Install the remaining Feed Screws in the Feed Support Plate and tighten all six Feed Screws completely.

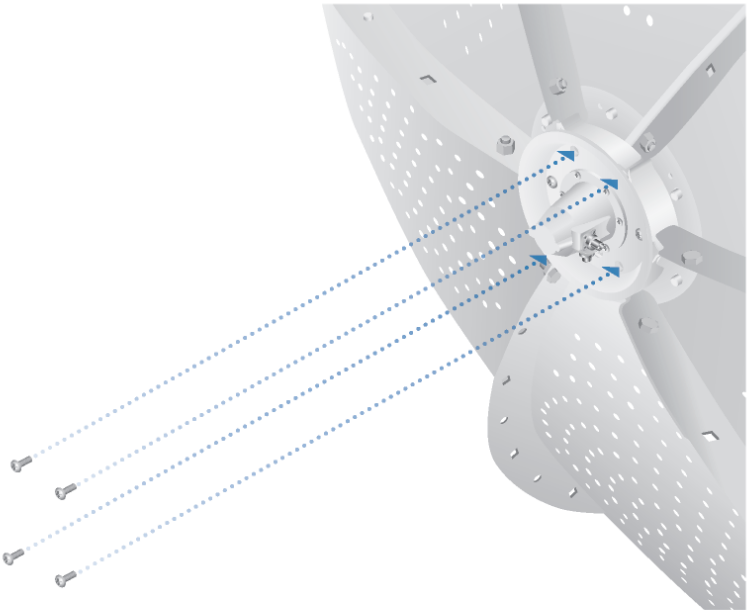

7. Securely tighten the six innermost fasteners on the reflector panels, and then the six outermost fasteners.

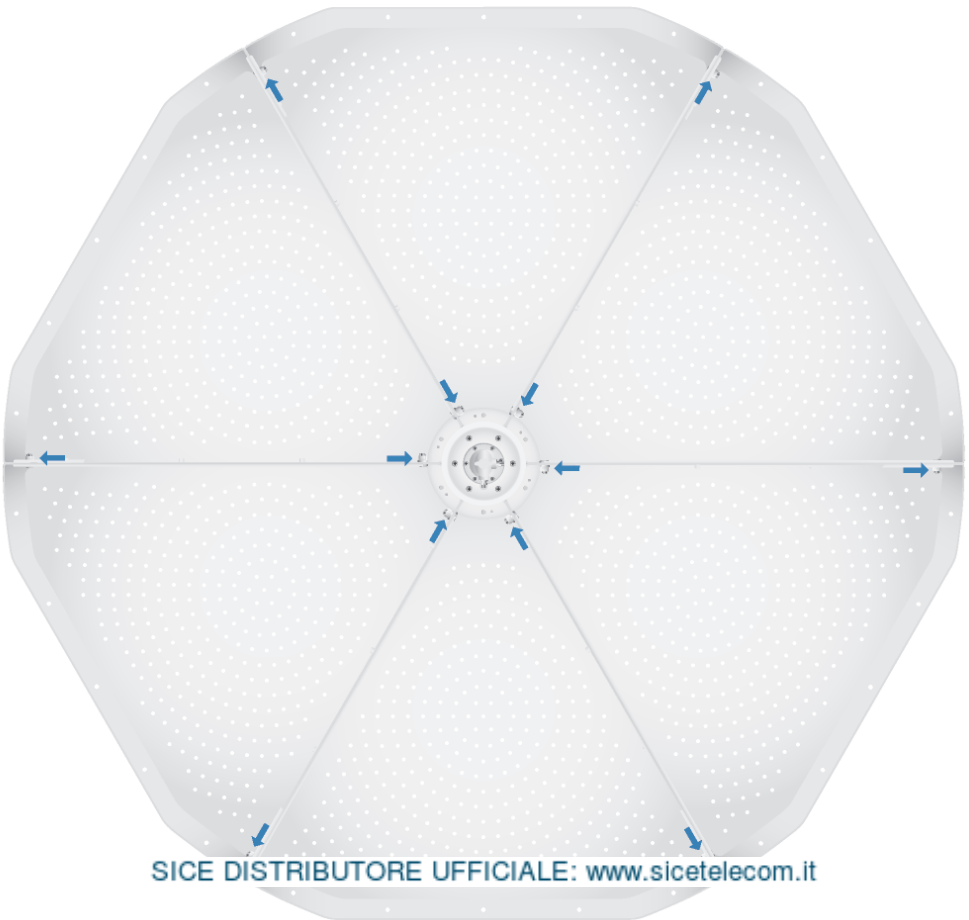

SICE DISTRIBUTORE UFFICIALE: www.sicetelecom.it

8. Attach the six Support Arms to the ribs of the Reflector Panels using 18 M8 bolts and fasteners (flat washers, lock washers, and nuts), leaving them loosely tightened.

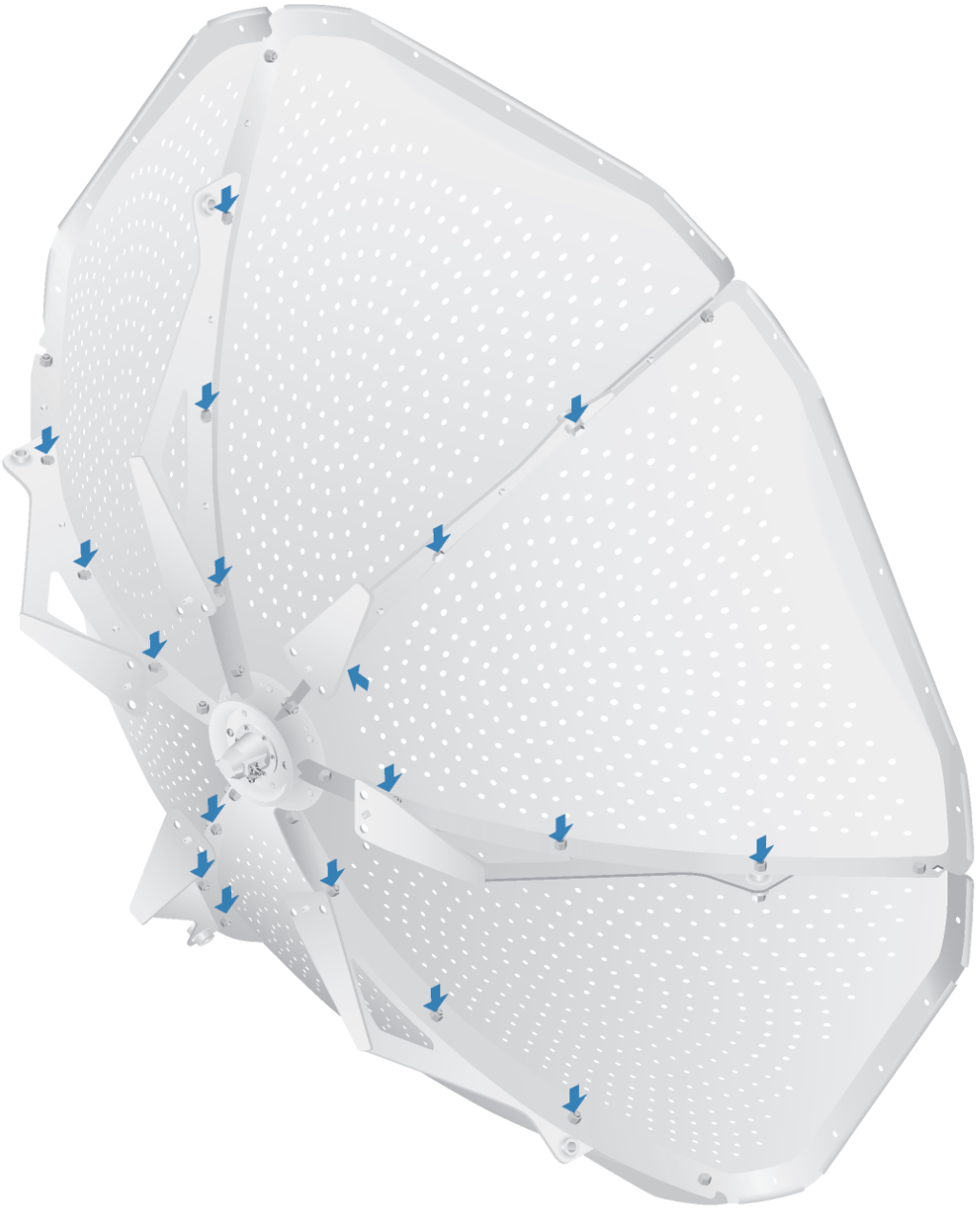

9. Place the Frame Plate on the Support Arms, ensuring that the six locating pins (circled below; two pins are hidden by the Frame Plate) fully engage the bracket. Then install 12 Frame Plate M10 bolts and fasteners (flat washers, lock washers, and nuts), one on each side of each locating pin.

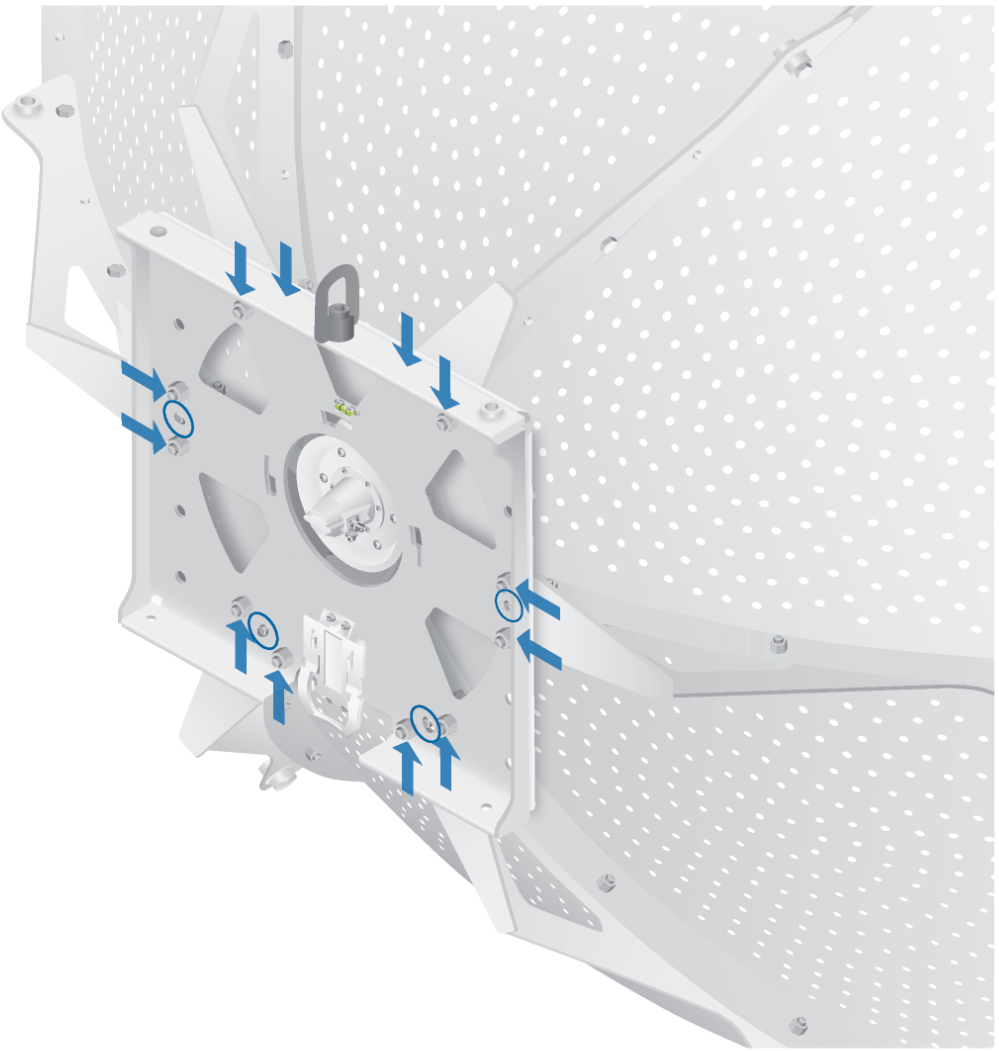

10. Fully tighten the 18 fasteners that were attached to the Support Arms in step 8.

SICE DISTRIBUTORE UFFICIALE: www.sicetelecom.it

11. Attach the RF Cables to the radio (the Rocket Prism 5AC Gen2 is shown below as an example).

12. Mount the radio onto the Frame Plate.

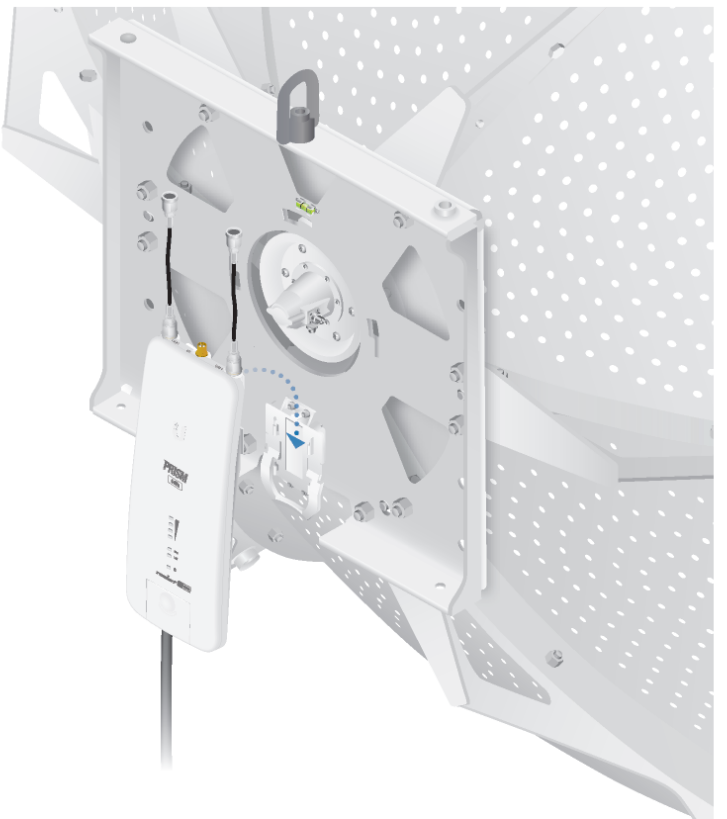

SICE DISTRIBUTORE UFFICIALE: www.sicetelecom.it

13. Connect the RF Cables to the SMA connectors, and attach the Shroud over the radio.

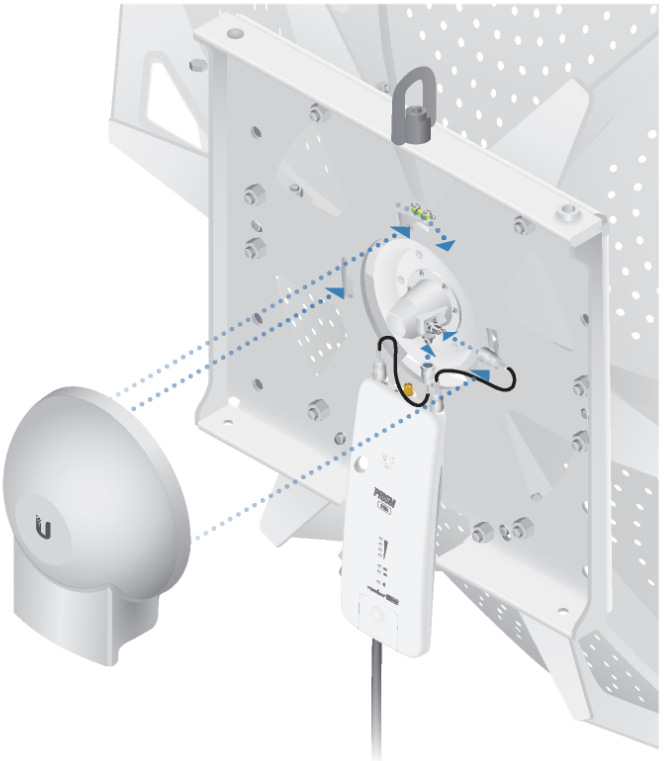

14. Apply Grease (included) to the threads of the elevation adjustment screw on the Precision Aiming Bracket.

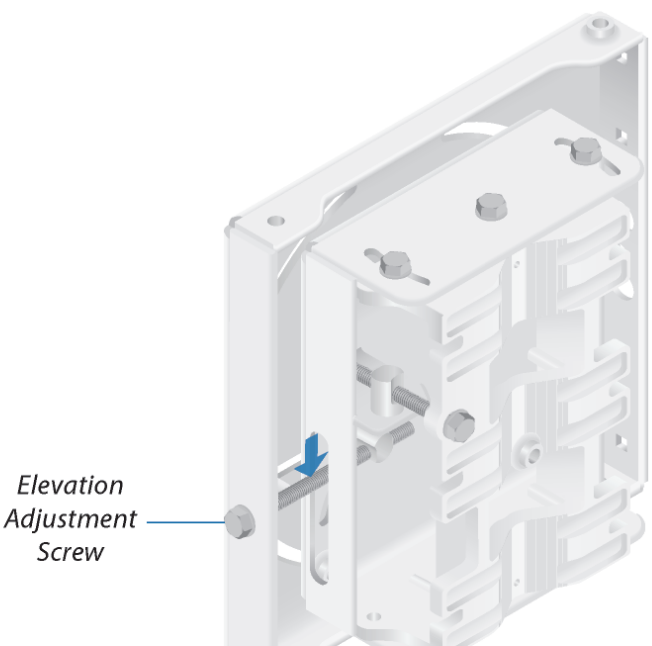


SICE DISTRIBUTORE UFFICIALE: www.sicetelecom.it

15. Place the Precision Aiming Bracket on the Frame Plate on the opposite side of the dish from where the Wind Brace will be installed. Guide the holes over the fasteners on the Frame Plate. Secure the Precision Aiming Bracket using four M10 bolts and fasteners (flat washers, lock washers, and nuts), tightening them fully.

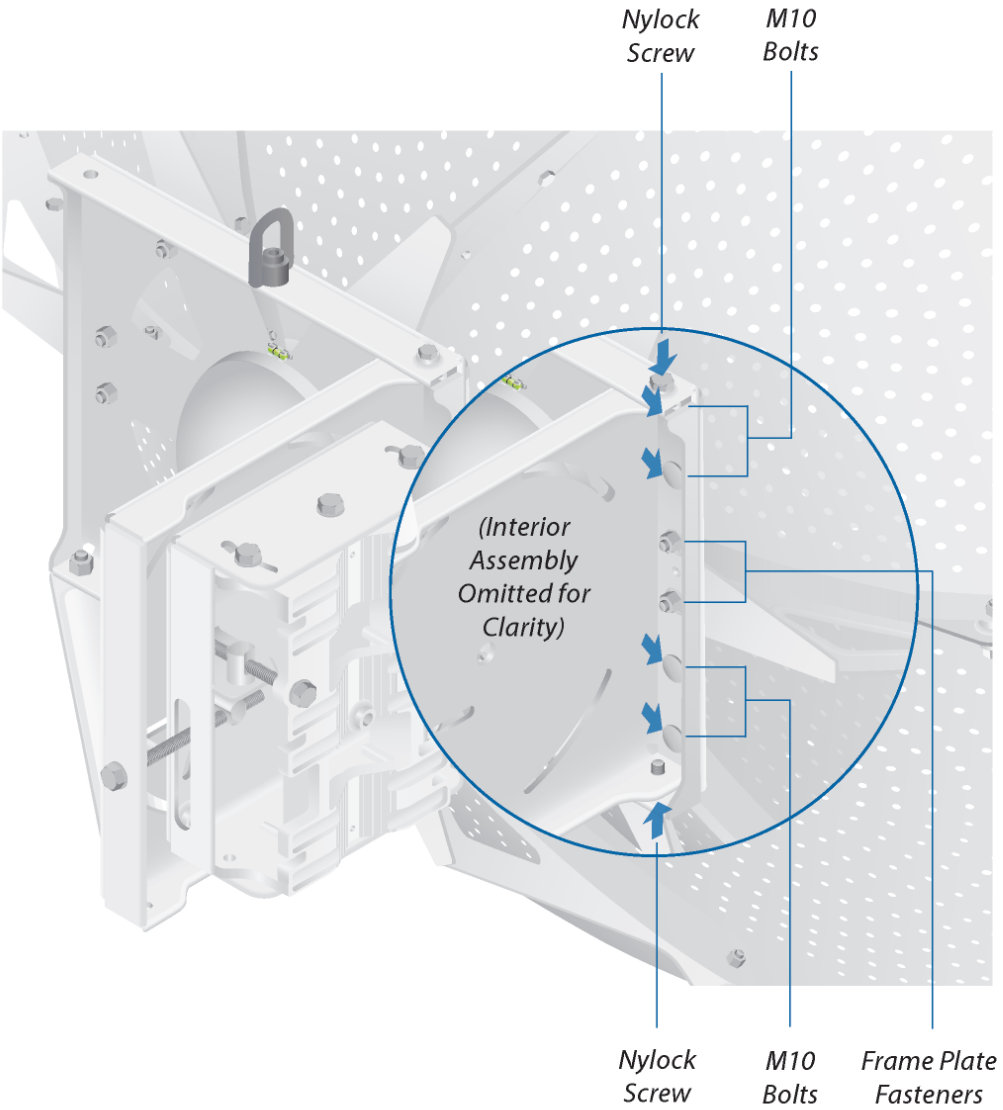


Note: Two Nylock Screws can be installed to provide additional support.

16. Attach the two Support Braces to the Frame Plate and Precision Bracket using two M10 bolts and fasteners (flat washers, lock washers, and nuts) per brace.

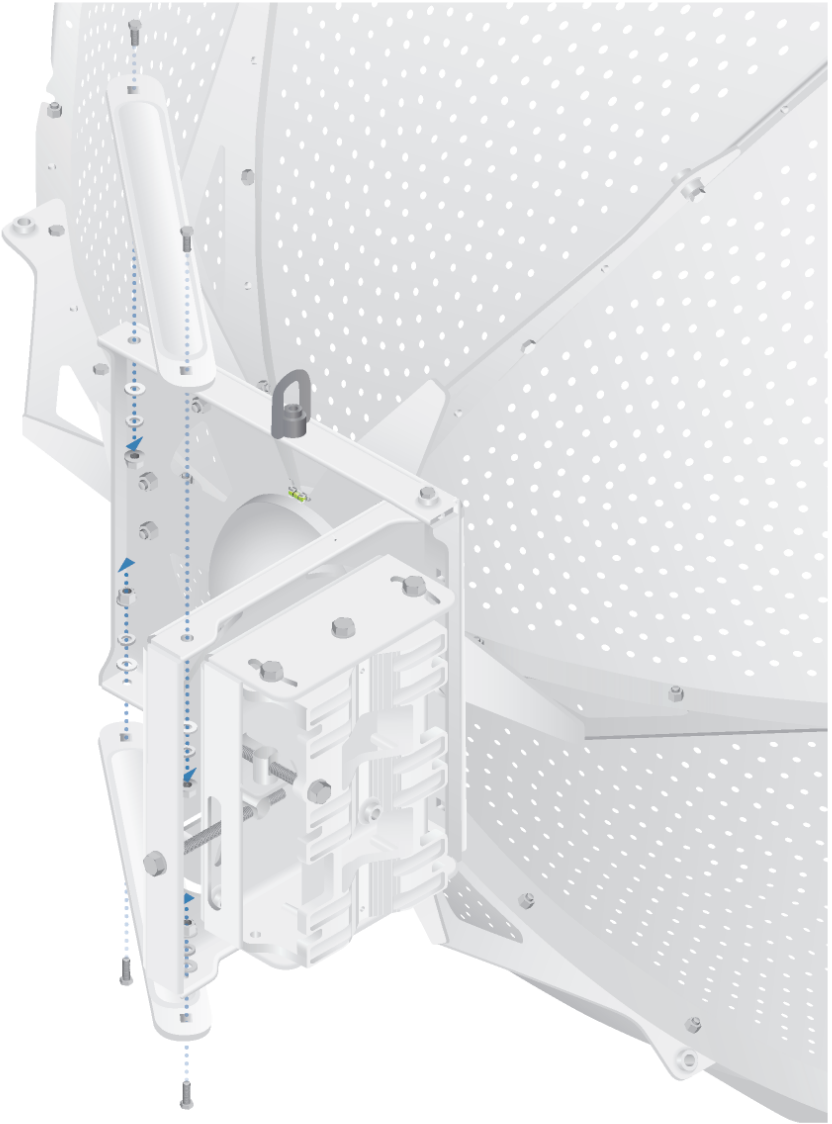

17. Attach the Wind Brace to the Support Arm on the opposite side of the dish from the Precision Aiming Bracket.

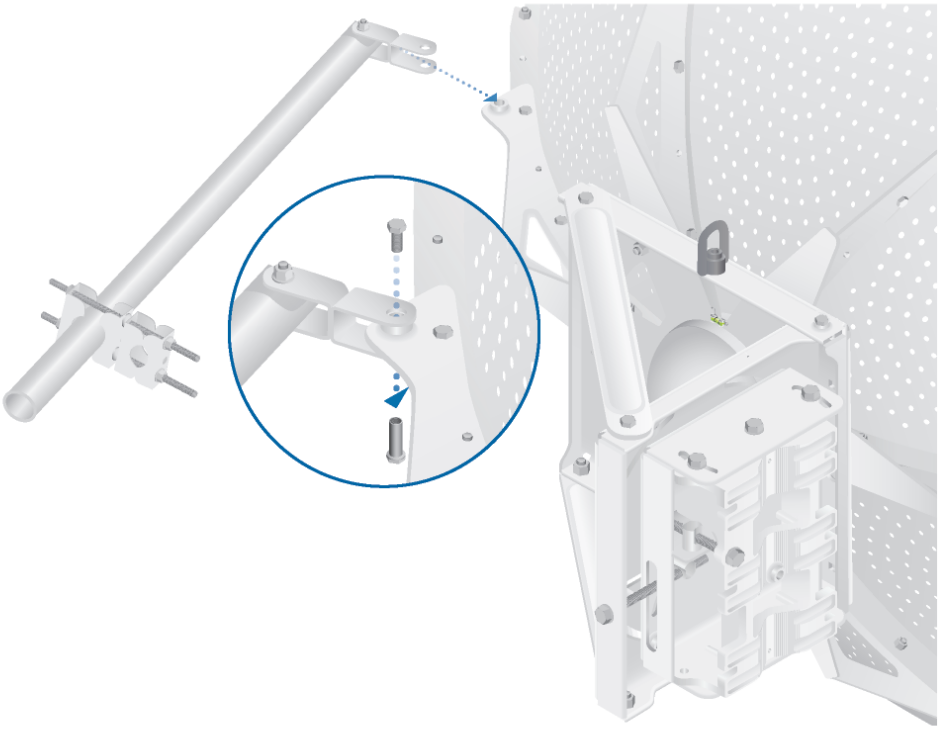

18. Lift the dish assembly by the hoist ring, and secure the Precision Aiming Bracket to a pole using the three Mount Clamps and Mount Clamp M10 bolts and fasteners (flat washers, lock washers, and nuts).

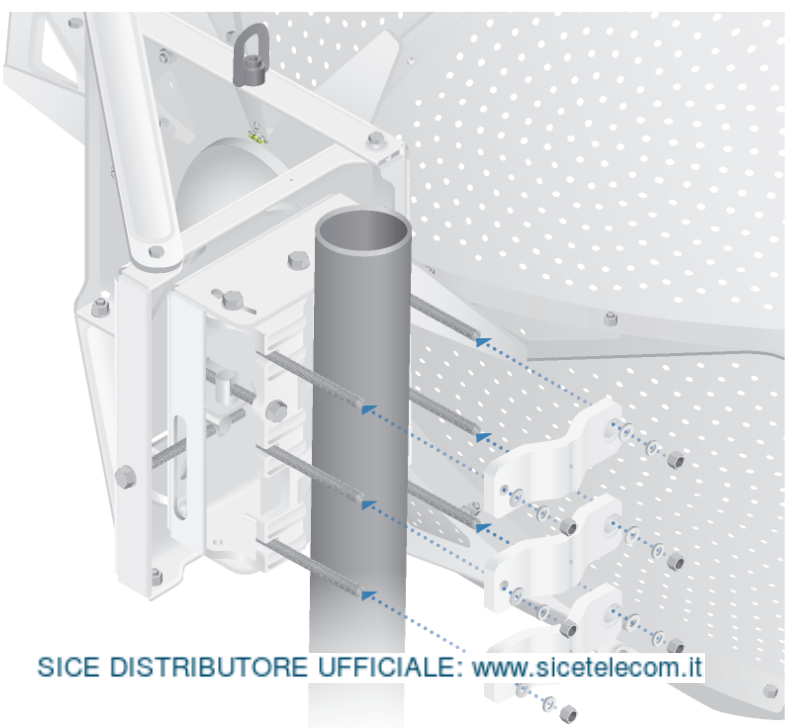

SICE DISTRIBUTORE UFFICIALE: www.sicetelecom.it

19. Fine-tune the aiming by turning the elevation and azimuth adjustment screws.

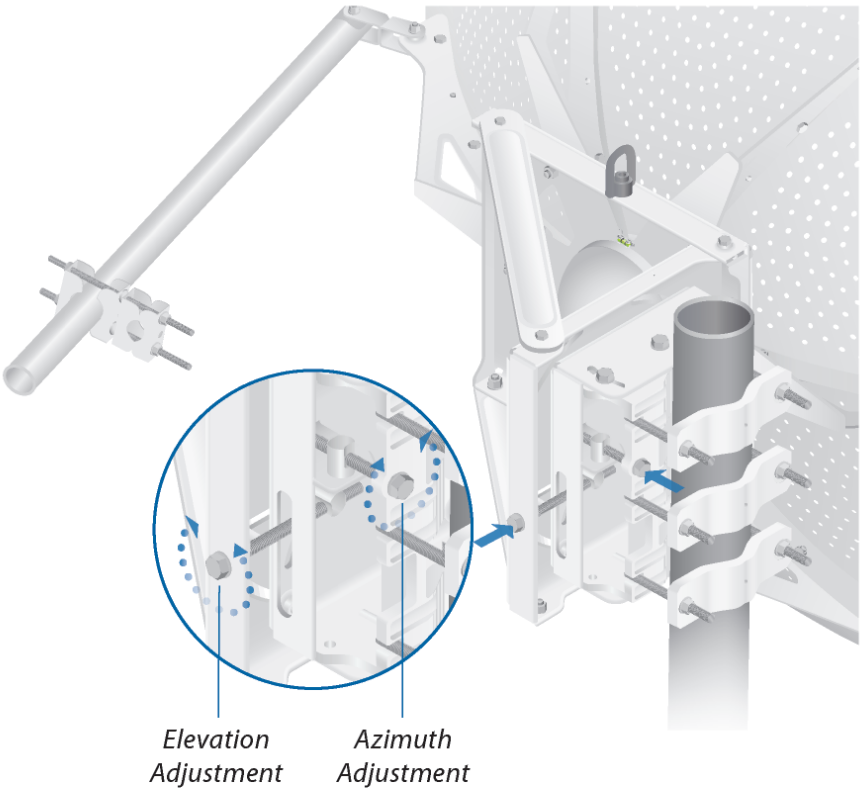


20. Lock the elevation and azimuth by tightening 11 locking screws (one screw is not shown below due to the pole).

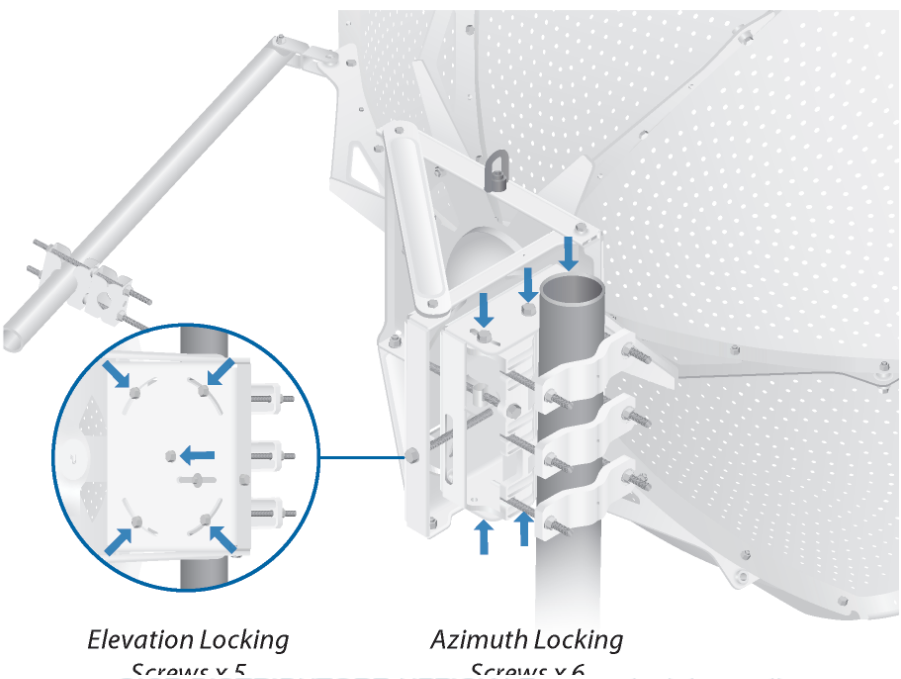


SICE DISTRIBUTORE UFFICIALE: www.sicetelecom.it

21. Attach the Wind Brace to a support pole to complete the installation.

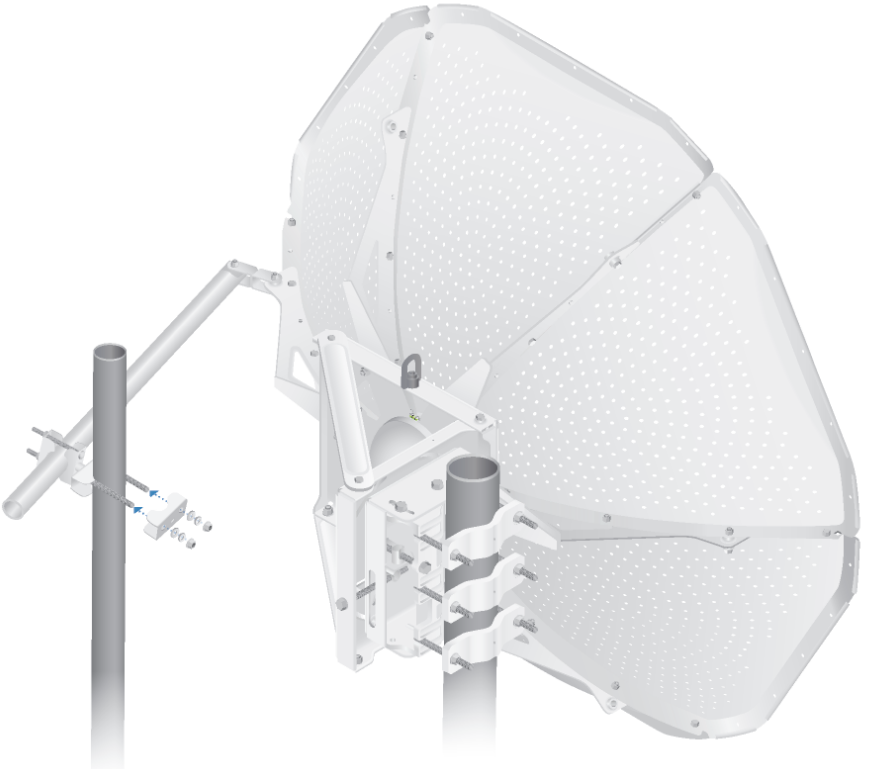

SICE DISTRIBUTORE UFFICIALE: www.sicetelecom.it

## Dual Slant 45 Polarity (Optional)

By default, the Radio Feed uses V/H polarity. To change it to use dual slant 45 polarity, perform the steps below before attaching the feed to the dish assembly:

1. With the small locating pin in the 6:00 position, remove six screws from the OMT and detach it from the Radio Feed.

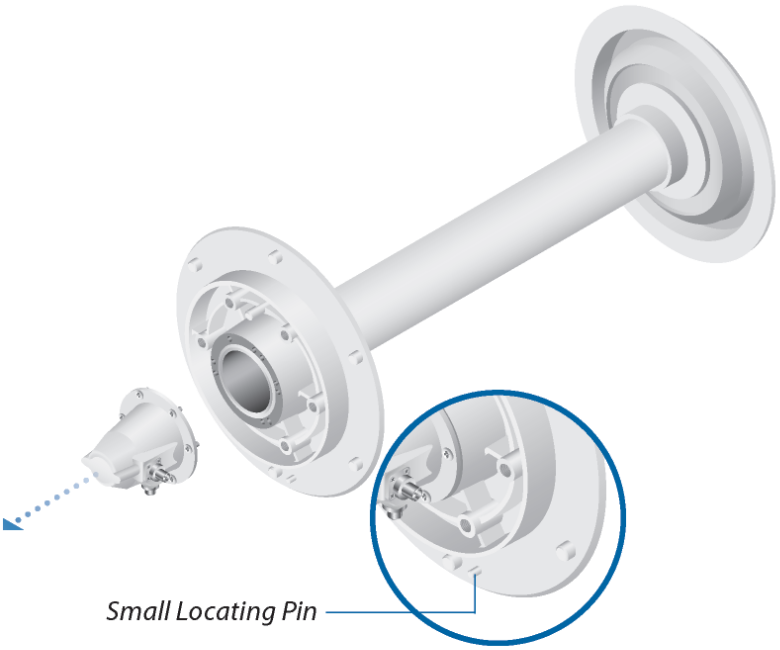


2. Rotate the OMT clockwise 45° and reattach it to the Radio Feed using the holes with hash marks.

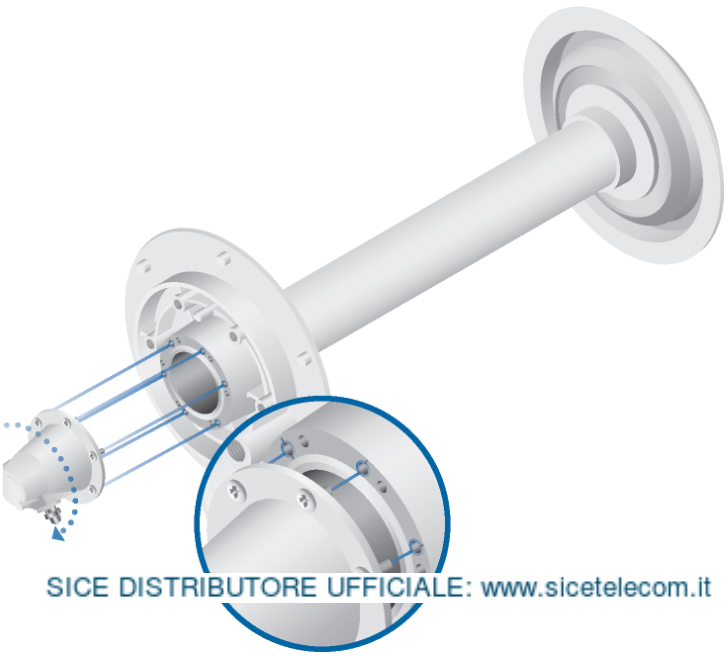

SICE DISTRIBUTORE UFFICIALE: www.sicetelecom.it

# Specifications

| MD-5G37 | |
|---|---|
| Dimensions<br>Assembled<br><br>Shipping | <br>1524 x 1524 x 813 mm<br>(60 x 60 x 32")<br>1025 x 885 x 520 mm<br>(40.35 x 34.8 x 20.5") |
| Weight | 40.9 kg (90.2 lb) |
| Operating Frequency | 4.9-5.8 GHz |
| Gain<br>4.9 GHz<br>5.15-5.85 GHz | <br>34 dBi<br>37 dBi |
| Max. VSWR | 1.7:1 |
| HPOL Beamwidth | 2.5° (3 dB) |
| VPOL Beamwidth | 2.5° (3 dB) |
| Elevation Beamwidth | 2.5° (3 dB) |
| Electrical Downtilt | 0° |
| Polarization | V/H,<br>Dual Slant 45 |
| Wind Loading | 6385 N @ 200 km/h<br>(1435 lbf @ 125 mph) |
| Wind Survivability | 200 km/h (125 mph) |
| Cross-Pol Isolation | 25 dB |
| Mounting | Universal Pole Mount (Included) |

SICE DISTRIBUTORE UFFICIALE: www.sicetelecom.it

# Safety Notices

1. Read, follow, and keep these instructions.
2. Heed all warnings.
3. Only use attachments/accessories specified by the manufacturer.

WARNING: Do not use this product in a location that can be submerged by water.

WARNING: Avoid using this product during an electrical storm. There may be a remote risk of electric shock from lightning.

# Electrical Safety Information

1. Compliance is required with respect to voltage, frequency, and current requirements indicated on the manufacturer's label. Connection to a different power source than those specified may result in improper operation, damage to the equipment or pose a fire hazard if the limitations are not followed.
2. There are no operator serviceable parts inside this equipment. Service should be provided only by a qualified service technician.

# Limited Warranty

**www.ui.com/support/warranty**

The limited warranty requires the use of arbitration to resolve disputes on an individual basis, and, where applicable, specify arbitration instead of jury trials or class actions.

# Compliance

## RF Exposure Warning

The antenna and transmitter must be installed to provide a separation distance from all persons and must not be located or operating in conjunction with any other antenna or transmitter. For the specific separation distance, refer to the Quick Start Guide for your device (transmitter).

L'antenne et l'émetteur doit être installé pour fournir une distance de séparation de toute les personnes et ne doit pas être situé ou opérant en conjonction avec une autre antenne ou un autre émetteur. Pour la distance spécifique de séparation, se référer au Guide de démarrage rapide pour votre appareil (l'émetteur).

SICE DISTRIBUTORE UFFICIALE: www.sicetelecom.it

# RoHS/WEEE Compliance Statement

## English

European Directive 2012/19/EU requires that the equipment bearing this symbol on the product and/or its packaging must not be disposed of with unsorted municipal waste. The symbol indicates that this product should be disposed of separately from regular household waste streams. It is your responsibility to dispose of this and other electric and electronic equipment via designated collection facilities appointed by the government or local authorities. Correct disposal and recycling will help prevent potential negative consequences to the environment and human health. For more detailed information about the disposal of your old equipment, please contact your local authorities, waste disposal service, or the shop where you purchased the product.

## Deutsch

Die Europäische Richtlinie 2012/19/EU verlangt, dass technische Ausrüstung, die direkt am Gerät und/oder an der Verpackung mit diesem Symbol versehen ist, nicht zusammen mit unsortiertem Gemeindeabfall entsorgt werden darf. Das Symbol weist darauf hin, dass das Produkt von regulärem Haushaltmüll getrennt entsorgt werden sollte. Es liegt in Ihrer Verantwortung, dieses Gerät und andere elektrische und elektronische Geräte über die dafür zuständigen und von der Regierung oder örtlichen Behörden dazu bestimmten Sammelstellen zu entsorgen. Ordnungsgemäßes Entsorgen und Recyceln trägt dazu bei, potentielle negative Folgen für Umwelt und die menschliche Gesundheit zu vermeiden. Wenn Sie weitere Informationen zur Entsorgung Ihrer Altgeräte benötigen, wenden Sie sich bitte an die örtlichen Behörden oder städtischen Entsorgungsdienste oder an den Händler, bei dem Sie das Produkt erworben haben.

SICE DISTRIBUTORE UFFICIALE: www.sicetelecom.it

## Español

La Directiva 2012/19/UE exige que los equipos que lleven este símbolo en el propio aparato y/o en su embalaje no deben eliminarse junto con otros residuos urbanos no seleccionados. El símbolo indica que el producto en cuestión debe separarse de los residuos domésticos convencionales con vistas a su eliminación. Es responsabilidad suya desechar este y cualesquiera otros aparatos eléctricos y electrónicos a través de los puntos de recogida que ponen a su disposición el gobierno y las autoridades locales. Al desechar y reciclar correctamente estos aparatos estará contribuyendo a evitar posibles consecuencias negativas para el medio ambiente y la salud de las personas. Si desea obtener información más detallada sobre la eliminación segura de su aparato usado, consulte a las autoridades locales, al servicio de recogida y eliminación de residuos de su zona o pregunte en la tienda donde adquirió el producto.

## Français

La directive européenne 2012/19/UE exige que l'équipement sur lequel est apposé ce symbole sur le produit et/ou son emballage ne soit pas jeté avec les autres ordures ménagères. Ce symbole indique que le produit doit être éliminé dans un circuit distinct de celui pour les déchets des ménages. Il est de votre responsabilité de jeter ce matériel ainsi que tout autre matériel électrique ou électronique par les moyens de collecte indiqués par le gouvernement et les pouvoirs publics des collectivités territoriales. L'élimination et le recyclage en bonne et due forme ont pour but de lutter contre l'impact néfaste potentiel de ce type de produits sur l'environnement et la santé publique. Pour plus d'informations sur le mode d'élimination de votre ancien équipement, veuillez prendre contact avec les pouvoirs publics locaux, le service de traitement des déchets, ou l'endroit où vous avez acheté le produit.

## Italiano

La direttiva europea 2012/19/UE richiede che le apparecchiature contrassegnate con questo simbolo sul prodotto e/o sull'imballaggio non siano smaltite insieme ai rifiuti urbani non differenziati. Il simbolo indica che questo prodotto non deve essere smaltito insieme ai normali rifiuti domestici. È responsabilità del proprietario smaltire sia questi prodotti sia le altre apparecchiature elettriche ed elettroniche mediante le specifiche strutture di raccolta indicate dal governo o dagli enti pubblici locali. Il corretto smaltimento ed il riciclaggio aiuteranno a prevenire conseguenze potenzialmente negative per l'ambiente e per la salute dell'essere umano. Per ricevere informazioni più dettagliate circa lo smaltimento delle vecchie apparecchiature in Vostro possesso, Vi invitiamo a contattare gli enti pubblici di competenza, il servizio di smaltimento rifiuti o il negozio nel quale avete acquistato il prodotto.

SICE DISTRIBUTORE UFFICIALE: www.sicetelecom.it

# Declaration of Conformity

български [Bulgarian] С настоящото UBIQUITI декларира, че този тип радиосъоръжение MD-5G37 е в съответствие с Директива 2011/65/ЕС. Цялостният текст на ЕС декларацията за съответствие може да се намери на следния интернет адрес: **www.ui.com/compliance**

Hrvatski [Croatian] UBIQUITI ovime izjavljuje da je radijska oprema tipa MD-5G37 u skladu s Direktivom 2011/65/EU. Cjeloviti tekst EU izjave o sukladnosti dostupan je na sljedećoj internetskoj adresi: **www.ui.com/compliance**

Čeština [Czech] Tímto UBIQUITI prohlašuje, že typ rádiového zařízení MD-5G37 je v souladu se směrnicí 2011/65/EU. Úplné znění EU prohlášení o shodě je k dispozici na této internetové adrese: **www.ui.com/compliance**

Dansk [Danish] Hermed erklærer UBIQUITI, at radioudstyrstypen MD-5G37 er i overensstemmelse med direktiv 2011/65/EU. EU-overensstemmelseserklæringens fulde tekst kan findes på følgende internetadresse: **www.ui.com/compliance**

Nederlands [Dutch] Hierbij verklaar ik, UBIQUITI, dat het type radioapparatuur MD-5G37 conform is met Richtlijn 2011/65/EU. De volledige tekst van de EU-conformiteitsverklaring kan worden geraadpleegd op het volgende internetadres: **www.ui.com/compliance**

English Hereby, UBIQUITI declares that the radio equipment type MD-5G37 is in compliance with Directive 2011/65/EU. The full text of the EU declaration of conformity is available at the following internet address: **www.ui.com/compliance**

Eesti keel [Estonian] Käesolevaga deklareerib UBIQUITI, et käesolev raadioseadme tüüp MD-5G37 vastab direktiivi 2011/65/EL nõuetele. ELi vastavusdeklaratsiooni täielik tekst on kättesaadav järgmisel internetiaadressil: **www.ui.com/compliance**

Suomi [Finnish] UBIQUITI vakuuttaa, että radiolaitetyyppi MD-5G37 on direktiivin 2011/65/EU mukainen. EU-vaatimustenmukaisuusvakuutuksen täysimittainen teksti on saatavilla seuraavassa internetosoitteessa: **www.ui.com/compliance**

Français [French] Le soussigné, UBIQUITI, déclare que l'équipement radioélectrique du type MD-5G37 est conforme à la directive 2011/65/UE. Le texte complet de la déclaration UE de conformité est disponible à l'adresse internet suivante: **www.ui.com/compliance**

Deutsch [German] Hiermit erklärt UBIQUITI, dass der Funkanlagentyp MD-5G37 der Richtlinie 2011/65/EU entspricht. Der vollständige Text der EU-Konformitätserklärung ist unter der folgenden Internetadresse verfügbar: **www.ui.com/compliance**

Ελληνικά [Greek] Με την παρούσα ο/η UBIQUITI, δηλώνει ότι ο ραδιοεξοπλισμός MD-5G37 πληροί την οδηγία 2011/65/ΕΕ. Το πλήρες κείμενο της δήλωσης συμμόρφωσης ΕΕ διατίθεται στην ακόλουθη ιστοσελίδα στο διαδίκτυο: **www.ui.com/compliance**

Magyar [Hungarian] UBIQUITI igazolja, hogy a MD-5G37 típusú rádióberendezés megfelel a 2011/65/EU irányelvnek. Az EU-megfelelőségi nyilatkozat teljes szövege elérhető a következő internetes címen: **www.ui.com/compliance**

Íslenska [Icelandic] Hér með lýsir UBIQUITI yfir því að MD-5G37 er í samræmi við grunnkröfur og aðrar kröfur, sem gerðar eru í tilskipun 2011/65/EU. Fullur texti ESB samræmisyfirlýsing er að finna á eftirfarandi netfangi: **www.ui.com/compliance**

Italiano [Italian] Il fabbricante, UBIQUITI, dichiara che il tipo di apparecchiatura radio MD-5G37 è conforme alla direttiva 2011/65/UE. Il testo completo della dichiarazione di conformità UE è disponibile al seguente indirizzo Internet: **www.ui.com/compliance**

Latviešu valoda [Latvian] Ar šo UBIQUITI deklarē, ka radioiekārta MD-5G37 atbilst Direktīvai 2011/65/ES. Pilns ES atbilstības deklarācijas teksts ir pieejams šādā interneta vietnē: **www.ui.com/compliance**

Lietuvių kalba [Lithuanian] Aš, UBIQUITI, patvirtinu, kad radijo įrenginių tipas MD-5G37 atitinka Direktyvą 2011/65/ES. Visas ES atitikties deklaracijos tekstas prieinamas šiuo interneto adresu: **www.ui.com/compliance**

SICE DISTRIBUTORE UFFICIALE: www.sicetelecom.it

Malti [Maltese] B'dan, UBIQUITI, niddikjara li dan it-tip ta' tagħmir tar-radju MD-5G37 huwa konformi mad-Direttiva 2011/65/UE. Id-dikjarazzjoni tal-konformità tista' tiġi kkonsultata minn **www.ui.com/compliance**

Norsk [Norwegian] UBIQUITI erklærer herved at utstyret MD-5G37 er i samsvar med de grunnleggende krav og øvrige relevante krav i direktiv 2011/65/EU. Den fulle teksten til EU-samsvarserklæringen er tilgjengelig på følgende internettadresse: **www.ui.com/compliance**

Polski [Polish] UBIQUITI niniejszym oświadcza, że typ urządzenia radiowego MD-5G37 jest zgodny z dyrektywą 2011/65/UE. Pełny tekst deklaracji zgodności UE jest dostępny pod następującym adresem internetowym: **www.ui.com/compliance**

Português [Portuguese] O(a) abaixo assinado(a) UBIQUITI declara que o presente tipo de equipamento de rádio MD-5G37 está em conformidade com a Diretiva 2011/65/UE. O texto integral da declaração de conformidade está disponível no seguinte endereço de Internet: **www.ui.com/compliance**

Română [Romanian] Prin prezenta, UBIQUITI declară că tipul de echipamente radio MD-5G37 este în conformitate cu Directiva 2011/65/UE. Textul integral al declarației UE de conformitate este disponibil la următoarea adresă internet: **www.ui.com/compliance**

Slovenčina [Slovak] UBIQUITI týmto vyhlasuje, že rádiové zariadenie typu MD-5G37 je v súlade so smernicou 2011/65/EÚ. Úplné EÚ vyhlásenie o zhode je k dispozícii na tejto internetovej adrese: **www.ui.com/compliance**

Slovenščina [Slovenian] UBIQUITI potrjuje, da je tip radijske opreme MD-5G37 skladen z Direktivo 2011/65/EU. Celotno besedilo izjave EU o skladnosti je na voljo na naslednjem spletnem naslovu: **www.ui.com/compliance**

Español [Spanish] Por la presente, UBIQUITI declara que el tipo de equipo radioeléctrico MD-5G37 es conforme con la Directiva 2011/65/UE. El texto completo de la declaración UE de conformidad está disponible en la dirección Internet siguiente: **www.ui.com/compliance**

Svenska [Swedish] Härmed försäkrar UBIQUITI att denna typ av radioutrustning MD-5G37 överensstämmer med direktiv 2011/65/EU. Den fullständiga texten till EU-försäkran om överensstämmelse finns på följande webbadress: **www.ui.com/compliance**

# Online Resources

Website www.ui.com
Support help.ui.com
Community community.ui.com
Downloads downloads.ui.com

SICE DISTRIBUTORE UFFICIALE: www.sicetelecom.it

UI.COM

Ubiquiti Inc.
685 Third Avenue
New York, NY 10017
USA

©2020 Ubiquiti Networks, Inc. All rights reserved. Ubiquiti, Ubiquiti Networks, the Ubiquiti U logo, the Ubiquiti beam logo, airFiber, MonsterDish, and Rocket are trademarks or registered trademarks of Ubiquiti Networks, Inc. in the United States and in ot
SICE DISTRIBUTORE UFFICIALE: www.sicetelecom.it
respective owners.

AI080620